INTERNATIONAL STANDARD

ISO 15874-3

First edition
2003-12-01

Plastics piping systems for hot and cold water installations — Polypropylene (PP) —

Part 3: Fittings

Systèmes de canalisations en plastique pour les installations d'eau chaude et froide — Polypropylène (PP) —

Partie 3: Raccords

STANDARDSISO.COM : Click to view the full PDF of ISO 15874-3:2003

Reference number
ISO 15874-3:2003(E)

© ISO 2003

PDF disclaimer

This PDF file may contain embedded typefaces. In accordance with Adobe's licensing policy, this file may be printed or viewed but shall not be edited unless the typefaces which are embedded are licensed to and installed on the computer performing the editing. In downloading this file, parties accept therein the responsibility of not infringing Adobe's licensing policy. The ISO Central Secretariat accepts no liability in this area.

Adobe is a trademark of Adobe Systems Incorporated.

Details of the software products used to create this PDF file can be found in the General Info relative to the file; the PDF-creation parameters were optimized for printing. Every care has been taken to ensure that the file is suitable for use by ISO member bodies. In the unlikely event that a problem relating to it is found, please inform the Central Secretariat at the address given below.

STANDARDSISO.COM : Click to view the full PDF of ISO 15874-3:2003

© ISO 2003

All rights reserved. Unless otherwise specified, no part of this publication may be reproduced or utilized in any form or by any means, electronic or mechanical, including photocopying and microfilm, without permission in writing from either ISO at the address below or ISO's member body in the country of the requester.

ISO copyright office
Case postale 56 • CH-1211 Geneva 20
Tel. + 41 22 749 01 11
Fax + 41 22 749 09 47
E-mail copyright@iso.org
Web www.iso.org

Published in Switzerland

Foreword

ISO (the International Organization for Standardization) is a worldwide federation of national standards bodies (ISO member bodies). The work of preparing International Standards is normally carried out through ISO technical committees. Each member body interested in a subject for which a technical committee has been established has the right to be represented on that committee. International organizations, governmental and non-governmental, in liaison with ISO, also take part in the work. ISO collaborates closely with the International Electrotechnical Commission (IEC) on all matters of electrotechnical standardization.

International Standards are drafted in accordance with the rules given in the ISO/IEC Directives, Part 2.

The main task of technical committees is to prepare International Standards. Draft International Standards adopted by the technical committees are circulated to the member bodies for voting. Publication as an International Standard requires approval by at least 75 % of the member bodies casting a vote.

Attention is drawn to the possibility that some of the elements of this document may be the subject of patent rights. ISO shall not be held responsible for identifying any or all such patent rights.

ISO 15874-3 was prepared by the European Committee for Standardization (CEN) in collaboration with Technical Committee ISO/TC 138, *Plastics pipes, fittings and valves for the transport of fluids*, Subcommittee SC 2, *Plastics pipes and fittings for water supplies*, in accordance with the Agreement on technical cooperation between ISO and CEN (Vienna Agreement).

Throughout the text of this document, read "...this European Standard..." to mean "...this International Standard...".

ISO 15874 consists of the following parts, under the general title *Plastics piping systems for hot and cold water installations — Polypropylene (PP)*:

— *Part 1: General*

— *Part 2: Pipes*

— *Part 3: Fittings*

— *Part 5: Fitness for purpose of the system*

— *Part 7: Guidance for the assessment of conformity* [Technical Specification]

STANDARDSISO.COM : Click to view the full PDF of ISO 15874-3:2003

© ISO 2003 – All rights reserved

Contents

Foreword ..... **v**
Introduction ..... **vi**
1 Scope **1**
2 Normative references **1**
3 Terms and definitions, symbols and abbreviated terms **2**
4 Material characteristics **3**
4.1 Plastics fitting material 3
4.2 Metallic fitting material 5
4.3 Influence on water intended for human consumption 5
5 General characteristics **5**
5.1 Appearance 5
5.2 Opacity 5
6 Geometrical characteristics **6**
6.1 General 6
6.2 Dimensions of sockets for socket fusion and electrofusion fittings 6
6.3 Dimensions of metallic fittings 9
7 Mechanical characteristics of plastics fittings **9**
7.1 General 9
7.2 Fitting material identical to the PP pipe compound 9
7.3 Fitting made from PP not identical to the PP pipe compound 9
7.4 Fittings made from plastics other than PP 9
8 Physical and chemical characteristics of plastics components **12**
9 Sealing elements **12**
10 Performance requirements **12**
11 Marking **13**
11.1 General requirements 13
11.2 Minimum required marking 13
Bibliography **14**

STANDARDSISO.COM : Click to view the full PDF of ISO 15874-3:2003

 © ISO 2003 – All rights reserved

Foreword

This document (EN ISO 15874-3:2003) has been prepared by Technical Committee CEN/TC 155 “Plastics piping systems and ducting systems”, the secretariat of which is held by NEN, in collaboration with Technical Committee ISO/TC 138 "Plastics pipes, fittings and valves for the transport of fluids".

NOTE This draft was submitted for CEN enquiry as prEN 12202-3:1995.

This European Standard shall be given the status of a national standard, either by publication of an identical text or by endorsement, at the latest by June 2004, and conflicting national standards shall be withdrawn at the latest by December 2005.

This standard is part of a System Standard for plastics piping systems of a particular material for a specified application. There are a number of such System Standards.

System Standards are based on the results of the work being undertaken in ISO/TC 138 "Plastics pipes, fittings and valves for the transport of fluids", which is a Technical Committee of the International Organisation for Standardization (ISO).

They are supported by separate Standards on test methods to which references are made throughout the System Standard.

The System Standards are consistent with general standards on functional requirements and recommended practices for installation.

EN ISO 15874:2003 consists of the following Parts [1)], under the general title: *Plastics piping systems for hot and cold water installations — Polypropylene (PP)*

— *Part 1: General*

— *Part 2: Pipes*

— *Part 3: Fittings* (the present standard)

— *Part 5: Fitness for purpose of the system*

— *Part 7: Guidance for the assessment of conformity* (published as CEN ISO/TS 15874-7).

This Part of EN ISO 15874 includes a Bibliography.

At the date of publication of this standard, System Standards for piping systems of other plastics materials used for the same application include the following:

EN ISO 15875, *Plastics piping systems for hot and cold water installations — Crosslinked polyethylene (PE-X) (ISO 15875:2003)*

EN ISO 15876, *Plastics piping systems for hot and cold water installations — Polybutylene (PB) (ISO 15876:2003)*

EN ISO 15877, *Plastics piping systems for hot and cold water installations — Chlorinated poly(vinyl chloride) (PVC-C) (ISO 15877:2003)*

For pipes and fittings which have conformed to the relevant national standard before 1st November, 2003, as shown by the manufacturer or by a certification body, the national standard may continue to apply until 30th November, 2005.

According to the CEN/CENELEC Internal Regulations, the national standards organizations of the following countries are bound to implement this European Standard: Austria, Belgium, Czech Republic, Denmark, Finland, France, Germany, Greece, Hungary, Iceland, Ireland, Italy, Luxembourg, Malta, Netherlands, Norway, Portugal, Slovakia, Spain, Sweden, Switzerland and the United Kingdom.

[1)] This System Standard does not incorporate a Part 4 *Ancillary equipment* or a Part 6 *Guidance for installation*. For ancillary equipment separate standards can apply. Guidance on installation of plastics piping systems made from different materials intended to be used for hot and cold water installations is given by ENV 12108 [1].

STANDARDSISO.COM : Click to view the full PDF of ISO 15874-3:2003

© ISO 2003 – All rights reserved

Introduction

The System Standard of which this is Part 3, specifies the requirements for a piping system when made from polypropylene (PP). The piping system is intended to be used for hot and cold water installations.

In respect of potential adverse effects on the quality of water intended for human consumption, caused by the product covered by this standard:

— This standard provides no information as to whether the product may be used without restriction in any of the Member States of the EU or EFTA;

— It should be noted that, while awaiting the adoption of verifiable European criteria, existing national regulations concerning the use and/or the characteristics of this product remain in force.

Requirements and test methods for materials and components, other than fittings, are specified in Part 1 and Part 2 of EN ISO 15874:2003. Characteristics for fitness for purpose (mainly for joints) are covered in Part 5. Part 7 (CEN ISO/TS 15874-7:2003) gives guidance for the assessment of conformity.

This Part of EN ISO 15874 specifies the characteristics of the fittings.

STANDARDSISO.COM : Click to view the full PDF of ISO 15874-3:2003

© ISO 2003 – All rights reserved

1 Scope

This Part of EN ISO 15874 specifies the characteristics of fittings for polypropylene (PP) piping systems intended to be used for hot and cold water installations within buildings for the conveyance of water, whether or not intended for human consumption (domestic systems) and for heating systems under design pressures and temperatures according to the class of application (see Table 1 of EN ISO 15874-1:2003).

This standard covers a range of service conditions (application classes) and design pressure classes. For values of T_D, T_{max} and T_{mal} in excess of those in Table 1 of Part 1, this standard does not apply.

NOTE It is the responsibility of the purchaser or specifier to make the appropriate selections from these aspects, taking into account their particular requirements and any relevant national regulations and installation practices or codes.

It also specifies the parameters for the test methods referred to in this standard.

In conjunction with the other parts of EN ISO 15874 (see Foreword) it is applicable to fittings made from PP and to fittings made from other materials which are intended to be fitted to pipes conforming to EN ISO 15874-2 for hot and cold water installations and whereby the joints conform to the requirements of EN ISO 15874-5.

It is also applicable to fittings made from alternative materials which when fitted to pipes conforming to Part 2, conform to the requirements of Part 5 of EN ISO 15874.

This standard is applicable to fittings of the following types:

— socket fusion fittings

— electrofusion fittings

— mechanical fittings

— fittings with incorporated inserts

2 Normative references

This standard incorporates by dated or undated reference, provisions from other publications. These normative references are cited at the appropriate places in the text and the publications are listed hereafter. For dated references, subsequent amendments to, or revisions of, any of these publications apply to this standard only when incorporated in it by amendment or revision. For undated references the latest edition of the publication referred to applies (including amendments).

EN 578, *Plastics piping systems — Plastics pipes and fittings — Determination of the opacity.*

EN 681-1, *Elastomeric seals — Materials requirements for pipe joint seals used in water and drainage applications — Part 1: Vulcanized rubber.*

EN 681-2, *Elastomeric seals — Materials requirements for pipe joint seals used in water and drainage applications — Part 2: Thermoplastic elastomers.*

EN 921:1994, *Plastics piping systems — Thermoplastics pipes — Determination of resistance to internal pressure at constant temperature.*

EN 1254-3:1998, *Copper and copper alloys — Plumbing fittings — Part 3: Fittings with compression ends for use with plastics pipes.*

EN 10088-1, *Stainless steels — Part 1: List of stainless steels.*

prEN 10226-1, *Pipe threads where pressure tight joints are made on the threads — Part 1: Taper external threads and parallel internal treads — Dimensions, tolerances and designation.*

EN 12107, *Plastics piping systems — Injection-moulded thermoplastics fittings, valves and ancillary equipment — Determination of long-term hydrostatic strength of thermoplastics materials for injection moulding of piping components.*

STANDARDSISO.COM : Click to view the full PDF of ISO 15874-3:2003

© ISO 2003 – All rights reserved

EN ISO 228-1, *Pipe threads where pressure-tight joints are not made on the threads — Part 1: Dimensions, tolerances and designation (ISO 228-1:2000).*

EN ISO 3126, *Plastics piping systems — Plastics piping components — Measurement of dimensions (ISO 3126:2003).*

EN ISO 9080, *Plastics piping and ducting systems — Determination of the long-term hydrostatic strength of thermoplastics materials in pipe form by extrapolation (ISO 9080:2003).*

EN ISO 15874-1:2003, *Plastics piping systems for hot and cold water installations — Polypropylene (PP) — Part 1: General (ISO 15874-1:2003).*

EN ISO 15874-2:2003, *Plastics piping systems for hot and cold water installations — Polypropylene (PP) — Part 2: Pipes (ISO 15874-2:2003).*

EN ISO 15874-5, *Plastics piping systems for hot and cold water installations — Polypropylene (PP) — Part 5: Fitness for purpose of the system (ISO 15874-5:2003).*

ISO 1133:1997, *Plastics — Determination of the melt mass-flow rate (MFR) and the melt volume-flow rate (MVR) of thermoplastics.*

ISO 12092, *Fittings, valves and other piping system components made of unplasticized poly(vinyl chloride) (PVC-U), chlorinated poly(vinyl chloride) (PVC-C), acrylonitrile-butadiene-styrene (ABS) and acrylonitrile-styrene-acrylester (ASA) for pipes under pressure — Resistance to internal pressure — Test method.*

3 Terms and definitions, symbols and abbreviated terms

For the purposes of this standard, terms and definitions, symbols and abbreviations given in EN ISO 15874-1:2003 apply together with the following terms and definitions:

3.1
fitting
component of a piping system, which connects two or more pipes and/or fittings together, without any further function

3.2 Mechanical fittings

3.2.1
compression fitting
fitting in which the joint is made by the compression of a ring or sleeve on the outside wall of the pipe with or without additional sealing elements and with internal support

3.2.2
crimped fitting
fitting in which the joint is made by crimping of the fitting and/or a ring on the outside wall of the pipe by means of a special tool

3.2.3
flanged fitting
fitting in which the pipe connection consists of two mating flanges which are mechanically pressed together and sealed by the compression of an elastomeric sealing element between them

3.2.4
flat seat union fitting
fitting in which the pipe connection consists primarily of two components, at least one of which normally incorporates a flat sealing surface, which are mechanically pressed together by means of screwed nut or similar and sealed by the compression of an elastomeric sealing element between them

STANDARDSISO.COM : Click to view the full PDF of ISO 15874-3:2003

 © ISO 2003 – All rights reserved

3.3 Fittings for fusion

3.3.1
socket fusion fitting
fitting in which the joint with the pipe is made by melting together the outer part of the pipe with the inner part of the fitting by means of heat induced by heated tool

3.3.2
electrofusion fitting
fitting in which the joint with the pipe is made by melting together the outer part of the pipe and the inner part of the fitting by means of heat induced by current flowing in an appropriate resistor inserted in the fitting body

3.4
fitting with incorporated inserts
fitting in which the joint is made by means of connecting threads or other outlets, inserted in the plastics body combined with fusion ends for socket fusion or electrofusion

4 Material characteristics

4.1 Plastics fitting material

4.1.1 Fitting material identical to the PP pipe compound

The material from which fittings are made shall conform to the requirements as specified for pipes in EN ISO 15874-2:2003.

When tested in accordance with the test method as specified in Table 1 using the indicated parameters, injection moulded tubular test pieces shall withstand the hydrostatic (hoop) stress without bursting or leakage.

STANDARDSISO.COM : Click to view the full PDF of ISO 15874-3:2003

© ISO 2003 – All rights reserved

Table 1 — Mechanical characteristic of tubular test pieces made of PP by injection moulding

Characteristic	Requirement	Test parameters for the individual tests				Test method
Resistance to internal pressure	No bursting or leakage during the test period	**PP-H**				EN 921:1994 (together with EN 12107)
		Hydrostatic (hoop) stress MPa	**Test temp.** °C	**Test period** h	**Number of test pieces**	
		21,0	20	1	3	
		3,5	95	1000	3	
		PP-B				
		Hydrostatic (hoop) stress MPa	**Test temp.** °C	**Test period** h	**Number of test pieces**	
		16,0	20	1	3	
		2,6	95	1000	3	
		PP-R				
		Hydrostatic (hoop) stress MPa	**Test temp.** °C	**Test period** h	**Number of test pieces**	
		16,0	20	1	3	
		3,5	95	1000	3	
		Test parameters for all tests				
		Sampling procedure		[a]		
		Type of end cap		Type a)		
		Orientation of test piece		Not specified		
		Type of test		Water-in–water		

[a] The sampling procedure is not specified. For guidance see CEN ISO/TS 15874-7 [2].

STANDARDSISO.COM : Click to view the full PDF of ISO 15874-3:2003

4.1.2 PP Fitting material not identical to the PP pipe compound

4.1.2.1 Evaluation of σ_{LCL}-values and control points

The fitting material in form of injection-moulded tubular test pieces shall be evaluated by using the method given in EN ISO 9080 or equivalent where internal pressure tests are made in accordance with EN 921:1994 (together with EN 12107) to find the σ_{LCL}-values. The σ_{LCL}-values thus determined shall be used to determine the design stress, σ_{DF}, (see annex A of EN ISO 15874-2:2003) and values of hydrostatic stress, σ_F, corresponding to the temperature and time control points given in Table 2.

NOTE 1 One equivalent way of evaluation is to calculate the σ_{LCL}-value for each temperature (for example 20 °C, 60 °C and 95 °C) individually.

If evaluation using the method given in EN ISO 9080 or equivalent is available from long-term internal pressure tests relative to extruded pipes of the same compound as used for the fitting, the injection-moulded tubular test pieces shall conform to the times for failure at the hydrostatic stress levels for the materials corresponding to the test temperature and the control points given in Table 2.

The relevant test temperature shall be equal to or higher than the maximum design temperature, T_{max}, for the service condition class.

© ISO 2003 – All rights reserved

Table 2 — Control points for testing fitting materials with tubular test pieces relative to classification of service conditions

	All application classes	Application			
		Class 1	Class 2	Class 4	Class 5
Maximum design temperature, T_{max}, in °C	–	80	80	70	90
Test temperature, T_{Test}, in °C	20	95 [a]	95 [a]	80	95
Test duration, in h	1	1000	1000	1000	1000
[a] Conducted at 95 °C to match existing test facilities.					

NOTE 2 It is recommended that the nominal diameter of the injection-moulded tubular test pieces should be in the range of the nominal diameters of fittings normally produced by the manufacturer.

4.1.2.2 Thermal stability

When testing the thermal stability by hydrostatic pressure testing in accordance with EN 921:1994 at 110 °C for 8760 h, using a test piece in pipe form or a fitting connected to pipes, the test piece shall withstand the test without bursting. The test shall be conducted in water-in-air at an internal pressure equivalent to the hydrostatic stress used in the pipe material thermal stability test.

If a fitting connected to pipes is used as a test piece and the pipe connection fails then the thermal stability test shall be repeated using a test piece in pipe form.

4.1.3 Plastics fitting material other than PP

Plastics material, other than PP, for fittings intended to be used in PP piping systems for hot and cold water within buildings for the conveyance of water, whether or not for human consumption (domestic systems) and for heating systems shall conform to 4.1.2.

4.2 Metallic fitting material

Metallic material for fittings intended to be used with components conforming to EN ISO 15874 shall conform to the requirements given in EN 1254-3 or EN 10088-1, as applicable.

4.3 Influence on water intended for human consumption

The material shall conform to EN ISO 15874-1:2003.

5 General characteristics

5.1 Appearance

When viewed without magnification, the internal and external surfaces of fittings shall be smooth, clean and free from scoring, cavities, and other surface defects to an extent that would prevent conformity to this standard. The material shall not contain visible impurities. Slight variations in appearance of the colour shall be permitted. Each end of a fitting shall be square to its axis.

5.2 Opacity

Fittings that are declared to be opaque shall not transmit more than 0,2 % of visible light when tested in accordance with EN 578.

NOTE This test is not necessary when the fitting body material is of the same opaque PP compound as the pipe.

STANDARDSISO.COM : Click to view the full PDF of ISO 15874-3:2003

© ISO 2003 – All rights reserved

6 Geometrical characteristics

6.1 General

Dimensions shall be measured in accordance with EN ISO 3126.

6.1.1 Nominal diameter(s)

The nominal diameter(s), d_n, of a fitting shall correspond to and be designated by the nominal outside diameter(s) of the pipe(s) conforming to EN ISO 15874-2:2003 for which they are designed.

6.1.2 Angles

The preferred nominal angles of non-straight fittings are 45° and 90°.

6.1.3 Threads

Threads used for jointing shall conform to prEN 10226-1. Where a thread is used as a fastening thread for jointing an assembly (e.g. union nuts) it shall conform to EN ISO 228-1 except that these requirements need not apply to the threads used by the manufacturer to join component parts of a fitting together.

6.2 Dimensions of sockets for socket fusion and electrofusion fittings

6.2.1 Dimensions of socket fusion fittings

The principal dimensions for socket fusion fittings as shown in Figure 1 shall be in accordance with Table 3 and Table 4 as applicable.

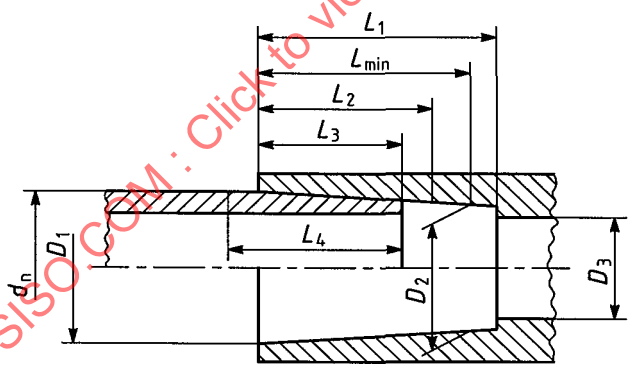

Key

d_n is the nominal outside diameter.

D_1 is the mean inside mouth diameter of the socket, which comprises the mean diameter of the circle at the inner section of the extension of the socket with the plane of the socket mouth.

D_2 is the mean inside root diameter of the socket, which comprises the mean diameter of the circle in a plane parallel to the plane of the mouth and separated from it by a distance of L_{min} (the reference socket length).

D_3 is the minimum bore which comprises the minimum diameter of the flow channel through the body of a fitting.

L_{min} is the reference socket length, which comprises the theoretical minimum socket length used for the purpose of calculations. The minimum value of L_{min} shall be equal to $(0{,}3d_n + 8{,}5)$ mm.

L_1 is the actual length of the socket, which comprises the distance from the mouth to the shoulder (if any). The minimum value of L_1 shall be L_{min}.

L_2 is the heated length of the fitting, which comprises the length of penetration of the heated tool into the socket. The minimum value of L_2 is $(L_{min} – 2{,}5)$ mm. The maximum value of L_2 shall be L_{min}.

L_3 is the insertion length, which comprises the depth of penetration of the heated pipe end or spigot end of a fitting into the socket. The minimum value of L_3 is $(L_{min} - 3{,}5)$ mm. The maximum value of L_3 shall be L_{min}.

L_4 is the heated length of pipe, which comprises the depth of penetration of the pipe end or spigot end of a fitting into the heated tool. The minimum value of L_4 shall be $(L_{min} – 3{,}5)$ mm.

Figure 1 — Socket and spigot dimensions for socket fusion fittings

STANDARDSISO.COM : Click to view the full PDF of ISO 15874-3:2003

© ISO 2003 – All rights reserved

Table 3 — Socket dimensions relative to length of socket fusion fittings

Dimensions in millimetres

Nominal diameter of the fitting	Socket reference length, L	Actual length of socket, L_1	Heated socket length, L_2		Penetration of pipe into socket, L_3		Heated length of pipe, L_4
d_n	L_{min}	$L_{1,min}$	$L_{2,min}$	$L_{2,max}$	$L_{3,min}$	$L_{3,max}$	$L_{4,min}$
16	13,3	13,3	10,8	13,3	9,8	13,3	9,8
20	14,5	14,5	12,0	14,5	11,0	14,5	11,0
25	16,0	16,0	13,5	16,0	12,5	16,0	12,5
32	18,1	18,1	15,6	18,1	14,6	18,1	14,6
40	20,5	20,5	18,0	20,5	17,0	20,5	17,0
50	23,5	23,5	21,0	23,5	20,0	23,5	20,0
63	27,4	27,4	24,9	27,4	23,9	27,4	23,9
75	31,0	31,0	28,5	31,0	27,5	31,0	27,5
90	35,5	35,5	33,0	35,5	32,0	35,5	32,0
110	41,5	41,5	39,0	41,5	38,0	41,5	38,0

NOTE $L_{min} = 0{,}3d_n + 8{,}5$; $L_{1,min} = L_{min}$; $L_{2,min} = L_{min} - 2{,}5$; $L_{2,max} = L_{min}$; $L_{3,min} = L_{min} - 3{,}5$; $L_{3,max} = L_{min}$; $L_{4,min} = L_{min} - 3{,}5$.

Table 4 — Socket dimensions of socket fusion fittings relative to diameter

Dimensions in millimetres

Nominal diameter of the fitting	Mean inside diameter of socket				Maximum out-of-roundness [a]	Minimum bore [a] D_3
	Root D_1		Root D_2			
d_n	$D_{1,min}$	$D_{1,max}$	$D_{2,min}$	$D_{2,max}$		$D_{3,min}$
Fittings where peeling techniques are optional						
16	15,2	15,5	15,1	15,4	0,4	11,2
20	19,2	19,5	19,0	19,3	0,4	15,2
25	24,2	24,5	23,9	24,3	0,4	19,4
32	31,1	31,5	30,9	31,3	0,5	25,0
40	39,0	39,4	38,8	39,2	0,5	31,4
50	48,9	49,4	48,7	49,2	0,6	39,4
63	61,9	62,5	61,6	62,1	0,6	49,8
Fittings where peeling techniques are not used						
75	74,3	74,9	73,1	73,7	1,0	59,4
90	89,3	89,9	87,9	88,5	1,0	71,6
110	109,4	110,0	107,7	108,3	1,0	87,6
Fittings where peeling techniques are always used						
75	73,7	74,2	73,4	73,9	1,0	59,4
90	88,6	89,2	88,2	88,8	1,0	71,6
110	108,4	109,0	108,0	108,6	1,0	87,6

[a] The out-of-roundness is the maximum inside diameter minus the minimum inside diameter of the socket measured in the same plane parallel to the plane of the socket mouth.
[b] This measurement is only relevant if a shoulder exists.

STANDARDSISO.COM : Click to view the full PDF of ISO 15874-3:2003

6.2.2 Dimensions of sockets for electrofusion fittings

The principal dimensions of sockets for electrofusion fittings as shown in Figure 2 shall be in accordance with Table 5.

© ISO 2003 – All rights reserved

The values of lengths L_1 and L_2 (see Figure 2) shall be in accordance with Table 5. The manufacturer shall declare the actual length.

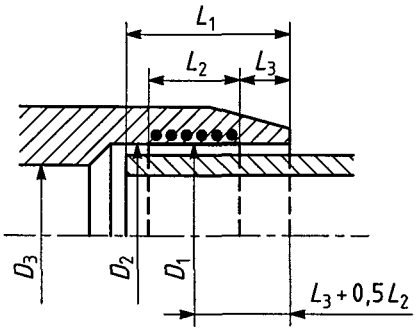

Key

D_1 is the mean inside diameter of the fusion zone which comprises the mean inside diameter when measured in a plane parallel to the plane of the mouth at a distance $L_3 + 0{,}5L_2$ from that face.

D_2 is the minimum inside diameter of the socket measured in any plane parallel to the plane of the mouth at a distance not greater than L_1 from that plane.

D_3 is the minimum bore which comprises the minimum diameter of the flow channel through the body of the fitting.

L_1 is the depth of penetration of the pipe or male end of a spigot fitting. In the case of a coupling without a stop it is not greater than half the total length of the fitting.

L_2 is the nominal length of the fusion zone, which comprises the heated length as declared by the manufacturer.

L_3 is the nominal unheated entrance length of the fitting, which comprises the distance between the mouth of the fitting and the start of the fusion zone as declared by the manufacturer.

Figure 2 — Principal dimensions for electrofusion fittings

Table 5 — Socket dimensions for electrofusion fittings

Dimensions in millimetres

Nominal diameter of the fitting	Minimum mean inside diameter [a] of fusion zone	Nominal length of fusion zone	Depth of penetration	
d_n	$D_{1,min}$	$L_{2,min}$	$L_{1,min}$	$L_{1,max}$
16	16,1	10	20	35
20	20,1	10	20	37
25	25,1	10	20	40
32	32,1	10	20	44
40	40,1	10	20	49
50	50,1	10	20	55
63	63,2	11	23	63
75	75,2	12	25	70
90	90,2	13	28	79
110	110,3	15	32	85
125	125,3	16	35	90
140	140,3	18	38	95
160	160,4	20	42	101

[a] In piping systems that involve spigot trimming, smaller values for D_1 are permitted if conforming to the manufacturer's specification.

STANDARDSISO.COM : Click to view the full PDF of ISO 15874-3:2003

© ISO 2003 – All rights reserved

6.3 Dimensions of metallic fittings

Metallic fittings shall conform to EN 1254-3.

7 Mechanical characteristics of plastics fittings

7.1 General

When tested in accordance with ISO 12092 using the test parameters given in Table 6, 7 or 8 where the test pressure is given in relation to the class of fitting and design pressure, the component shall withstand the test pressure, p_F, without bursting or leakage during the test period.

The testing shall be conducted in water-in-air.

The test pressure shall be calculated using the following equation:

$$p_F = p_D \times \frac{\sigma_F}{\sigma_{DF}}$$

where:

p_F is the hydrostatic test pressure, in bars, to be applied to the fitting body during the test period;

σ_F is the value of the hydrostatic stress, in megapascals, of the fitting body material corresponding to the test duration and test temperature conditions in Table 6, 7 or 8;

σ_{DF} is the design stress value, in megapascals, of the fitting body material as determined for the appropriate service condition class from data produced in accordance with 4.1 and annex A of EN ISO 15874-2:2003;

p_D is the design pressure of 4 bar or 6 bar or 8 bar or 10 bar, as applicable.

Fittings may be connected to the pipes for which they are intended to be used. Other methods may be used to seal the ends of the fitting body in order that the required pressure can be applied.

7.2 Fitting material identical to the PP pipe compound

In this case σ_{DF} has the same value as σ_{DP} and the fitting shall conform to the requirements given in Table 6, 7 or 8 using the test pressures, p_F, given, as applicable to the class of fitting and the design pressure.

7.3 Fitting made from PP not identical to the PP pipe compound

The fitting shall conform to the requirements given in Table 6, 7 or 8 relating to test temperature and minimum time to failure as applicable to the class of fitting and design pressure, using the equation in 7.1 and relevant values for hydrostatic stress, σ_F, and design stress, σ_{DF}, derived as in 4.1.2, to determine the test pressure p_F.

7.4 Fittings made from plastics other than PP

Fittings intended to be used in PP piping systems for hot and cold water within buildings for the conveyance of water, whether or not for human consumption (domestic systems), and for heating systems shall conform to 7.3.

STANDARDSISO.COM : Click to view the full PDF of ISO 15874-3:2003

© ISO 2003 – All rights reserved

Table 6 — Determination of test pressure p_F for PP-H

	Application							
	Class 1		Class 2		Class 4		Class 5	
Max. design temperature, T_{max}, in °C	80		80		70		90	
Design stress of fitting material, σ_{DF}, in MPa	2,90		1,99		3,24		1,83	
Test temperature [a], T_{test}, in °C	20	95	20	95	20	80	20	95
Test duration, t, in h	1	1000	1	1000	1	1000	1	1000
Hydrostatic stress of fitting material, σ_F, in MPa	21	3,5	21	3,5	21	5,0	21	3,5
Test pressure, p_F, in bars, for a design pressure, p_D, of: 4 bar	33,6 [b]	5,6 [b]	42,2	7,0	33,6 [b]	8,0 [b]	45,9	7,7
6 bar	43,4	7,2	63,3	10,6	38,9	9,3	68,9	11,5
8 bar	57,9	9,7	84,4	14,1	51,9	12,3	91,8	15,3
10 bar	72,4	12,1	105,5	17,6	64,8	15,4	114,8	19,1
Number of test pieces	3	3	3	3	3	3	3	3

[a] Generally the highest test temperature is taken to be (T_{max} + 10) °C with an upper limit of 95 °C. However to match existing test facilities the highest test temperature for classes 1 and 2 is also set at 95 °C. The hydrostatic stresses given correspond to the given test temperatures.
[b] The 20 °C, 10 bar, 50 years, cold water requirement, being higher, determines this value (see clause 4 of EN ISO 15874-1:2003.

STANDARDSISO.COM : Click to view the full PDF of ISO 15874-3:2003

© ISO 2003 – All rights reserved

Table 7 — Determination of test pressure p_F for PP-B

	Application							
	Class 1		Class 2		Class 4		Class 5	
Max. design temperature, T_{max}, in °C	80		80		70		90	
Design stress of fitting material, σ_{DF}, in MPa	1,67		1,19		1,95		1,19	
Test temperature [a], T_{test}, in °C	20	95	20	95	20	80	20	95
Test duration, t, in h	1	1000	1	1000	1	1000	1	1000
Hydrostatic stress of fitting material, σ_F , in MPa	16	2,6	16	2,6	16	3,7	16	2,6
Test pressure, p_F, in bars, for a design pressure, p_D, of: 4 bar	38,3	6,2	53,8	8,7	32,8	7,6	53,8	8,7
6 bar	57,5	9,3	80,7	13,1	49,2	11,4	80,7	13,1
8 bar	76,6	12,5	107,6	17,5	65,6	15,2	107,6	17,5
10 bar	95,8	15,6	134,4	21,8	82,1	19,0	134,5	21,8
Number of test pieces	3	3	3	3	3	3	3	3

[a] Generally the highest test temperature is taken to be (T_{max} + 10) °C with an upper limit of 95 °C. However to match existing test facilities the highest test temperature for classes 1 and 2 is also set at 95 °C. The hydrostatic stresses given correspond to the given test temperatures.

STANDARDSISO.COM : Click to view the full PDF of ISO 15874-3:2003

© ISO 2003 – All rights reserved